Engineering Structures 60 (2014) 287–299

Contents lists available at ScienceDirect

Engineering Structures

journal homepage: www.elsevier.com/locate/engstruct

A new shallow precast/prestressed concrete floor system for multi-story buildings in low seismic zones

George Morcous [a,*,1], Eliya Henin [b,2], Faten Fawzy [c,3], Mark Lafferty [d,4], Maher K. Tadros [e,5]

[a] University of Nebraska – Lincoln, Omaha, NE, United States
[b] Ebmeier Engineering, LLC, Glenwood, IA, United States
[c] Walsh Construction, LLC, Walnut Creek, CA, United States
[d] Concrete Industries, Inc., Lincoln, NE, United States
[e] e-Construct, LLC, Omaha, NE, United States

ARTICLE INFO

Article history:
Received 12 July 2013
Revised 6 December 2013
Accepted 10 December 2013

Keywords:
Precast concrete
Shallow floor
Inverted-tee beam
Hollow-core
Corbels
Shear friction

ABSTRACT

A key economic value for multi-story office buildings, hotels, and similar structures is to have a shallow floor system that reduces the total building height and, consequently, reduces overall building cost. Additionally, minimizing the need for shear walls results in additional economy and flexibility in re-modelling. This paper presents the development of a new precast prestressed concrete framing system that achieves both goals for buildings up to six-story tall built in areas of low seismicity. The proposed system consists of precast hollow core slabs, shallow inverted tee beams, multi-story columns, and cast-in-place topping, which are the common components in conventional precast construction. The proposed system eliminates the need for permanent concrete column corbels, and achieves continuity in the inverted tee beam through column block-outs to improve the system's resistance to lateral and gravity loads. Hollow-core slabs are also made continuous to minimize the need for shear walls in the hollow core direction. An experimental investigation was carried out to verify the theoretical capacities of the system components and to ensure that demand was met for the conditions being considered. Testing was performed using a full-scale specimen representing the area around an interior column. Test results indicated that the system is simple to construct and connection capacities can be adequately predicted using strain compatibility and shear friction theories. The design and construction of an office building in Lincoln, NE was presented as a successful implementation of the new system.

© 2013 Elsevier Ltd. All rights reserved.

1. Introduction

A conventional precast concrete floor system consists of hollow-core (HC) slabs supported by inverted-tee (IT) beams, which are supported on column corbels or wall ledges. This floor system allows rapid construction of multi-story buildings that are economical, durable, fire-resistant, and that have excellent deflection and vibration characteristics. The top surface of the HC floor system can either be a thin non-structural cementitious topping or cast-in-place (CIP) concrete composite topping that also provides a continuous leveled surface. Despite the advantages of conventional precast HC floor systems, they have two main limitations: (a) relatively large floor-to-floor height due to the depth of standard IT beams and the use of relatively large column corbels, and (b) uncoupling of the gravity load resisting system from the lateral load resisting system and, thus the need for a significant amount of shear walls.

Typically a 30 ft span would require a 28 in. deep IT plus a 2 in. topping resulting in a total floor depth of 30 in. and a span-to-depth ratio of 12; in addition to a 14 in. deep column corbel [11]. On the other hand, a cast-in-place post-tensioned concrete floor can have a structural floor depth of 8 in. resulting in a span-to-depth ratio of 45 and without corbels [10]. However, cast-in-place post-tensioned concrete floors are time consuming and relatively uneconomical due to the labor intensive operations of shoring and forming concrete. A shallow depth precast concrete floor could be very favorable due to its rapid construction and high quality control. Reducing the depth of structural floor and eliminating column corbels also result in a reduced floor height and saves on the cost of architectural, mechanical and electrical systems, allowing construction of additional floors for the same building height. Shear walls are typically used in conventional precast concrete floor systems to resist lateral loads. However, owners and developers would prefer the architectural flexibility of beam/column frames compared to using structural walls which increase

* Corresponding author. Tel.: +1 (402) 554 2544.
E-mail address: gmorcous2@unl.edu (G. Morcous).
[1] Associate Professor.
[2] Structural Engineer.
[3] Construction Engineer.
[4] President.
[5] Principal.

0141-0296/$ - see front matter © 2013 Elsevier Ltd. All rights reserved.
http://dx.doi.org/10.1016/j.engstruct.2013.12.016

construction cost and time, and limit remodeling options. Precast concrete floor systems could gain significant advantages over cast-in-place floor systems, if they could be designed as continuous floor systems that minimize the need for shear walls limiting their construction to around stair wells and elevator shafts.

Innovative precast floor systems have been developed over the last few decades by researchers and industry experts. Examples are the shallow floor system with single-story precast columns developed by Low et al. [7], Low et al. [8]; the floor system of inverted tees and double tees with openings in their stems to pass utility ducts developed by Thompson and Pessiki [14]; and the total precast floor system with integrated column capital for multi-story buildings developed by Hanlon et al. [5]. Although these systems are shallow precast floor systems, their use have been limited due to the need for special forms to fabricate and/or special equipment to erect these systems.

The main objective of this paper is to present the development of a shallow precast concrete floor system for multi-story residential and commercial buildings that eliminates the limitations of existing systems with regard to clear floor height and continuity, while maintaining speed of construction, simplicity of fabrication and economy. To achieve this general objective, the following specific objectives were identified for the proposed system:

- A span-to-depth ratio that reaches 24 under normal loading condictions (up to 100 psf).

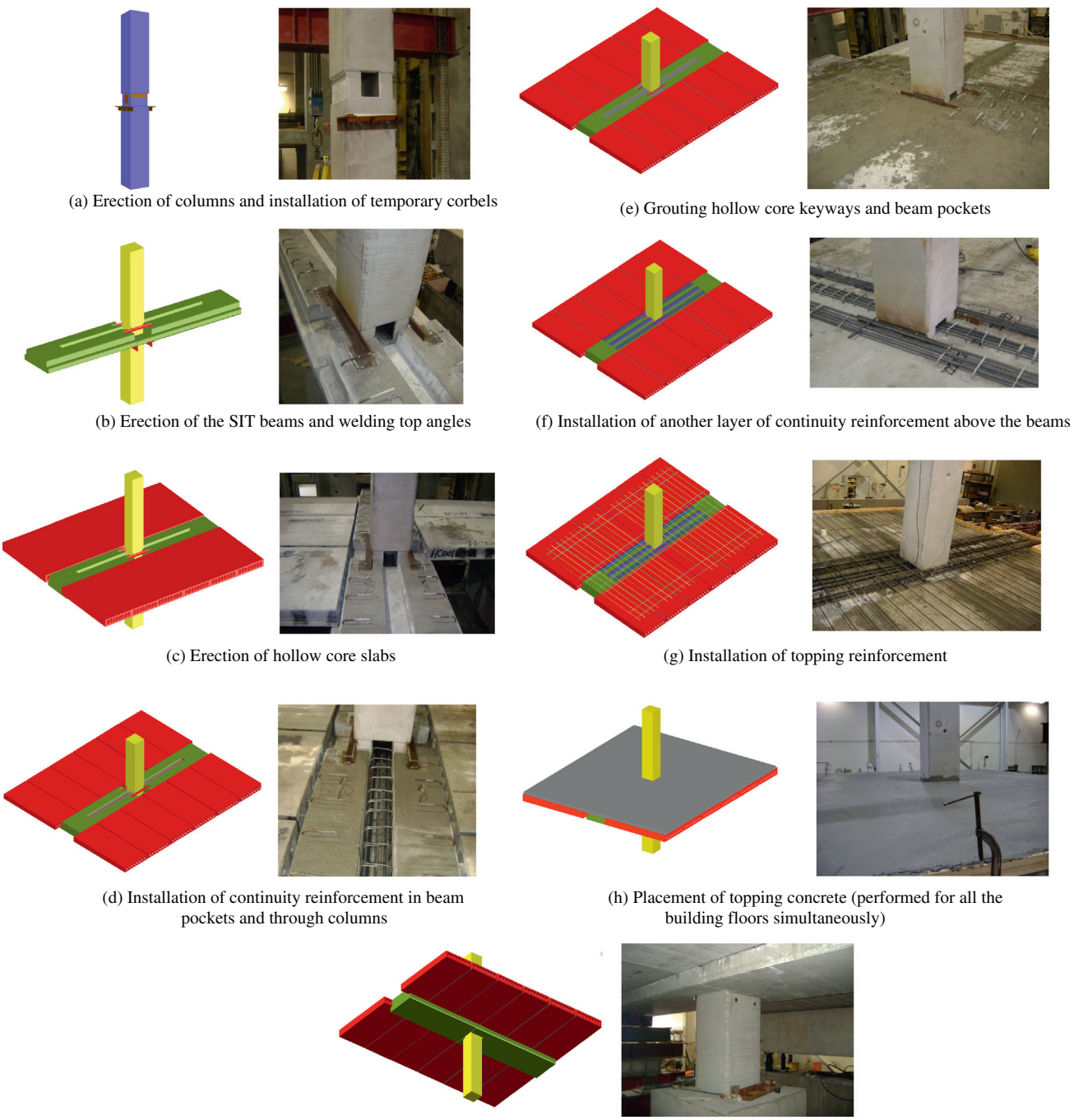
(a) Erection of columns and installation of temporary corbels
(b) Erection of the SIT beams and welding top angles
(c) Erection of hollow core slabs
(d) Installation of continuity reinforcement in beam pockets and through columns
(e) Grouting hollow core keyways and beam pockets
(f) Installation of another layer of continuity reinforcement above the beams
(g) Installation of topping reinforcement
(h) Placement of topping concrete (performed for all the building floors simultaneously)
(i) Removing temporary corbels

Fig. 1. Construction sequence of the proposed framing system.

- Continuity to provide adequate structural capacity to resist gravity and lateral loads for buildings up to six-story high in areas of low seismicity (no requirement for shear walls).
- Formed by standard precast/prestressed components.
- Eliminating corbels below the beams to provide additional space and flat soffit for hotel and office buildings.
- Following standard construction practice in the US, whereby all precast erection is performed independently of the cast-in-place operations. This is an important aspect of the project as this standard practice would maintain simple contractual arrangements and encourage quick implementation in the US.

It should be noted that the analytical and experimental investigations presented in this paper are limited to applications in low-seismicity zones, where the current codes permit the use of equivalent static forces and do not require cyclic or dynamic load analysis. The system could still be used in zones of moderate/high seismicity if it is used as the gravity load resisting system only, or if additional investigation is performed to satisfy cyclic load behaviour, and seismic energy dissipation.

2. System Description

The proposed floor system consists of the following four components:

- Precast concrete multi-story columns.
- Precast concrete shallow inverted tee (SIT) beams.
- Precast concrete hollow core (HC) slabs.
- Cast-in-place (CIP) concrete composite topping.

The first three precast concrete components are typical products that can be fabricated and handled using the facilities readily available to precast producers in North America. Hollow core slabs are chosen because they are the most affordable precast concrete floor product due to its automated production procedure. The proposed SIT beams do not require specialized forms, accessories, or equipment. The proposed multi-story columns result in simplified and plumb multi-story frame erection. All connections are simple for both precast producers and erectors to speed up fabrication and erection operations.

Fig. 1 shows the 3D presentation of the erection steps [3]: (a) precast concrete columns are erected and temporary corbels are installed; (b) SIT beams are erected on the temporary corbels and steel angles are welded to the steel plates embedded on SIT beam top flanges and column sides to stabilize beams during construction; (c) HC slabs are erected on beam ledges; (d) first set of longitudinal reinforcement and transverse reinforcement are placed in beam pockets and through column openings for continuity; (e) HC keyways and beam pockets are grouted to make the beams continuous for topping weight and to develop beam-column connections; (f) second set of longitudinal reinforcement is installed in beam pockets through the column openings as well as above the beam flange to enhance beam continuity and beam-column connection; (g) topping reinforcement is installed to provide continuity in the longitudinal direction of HC slabs; (h) CIP concrete is placed to completely fill the column openings and provide a levelled composite topping; and (i) temporary corbels are removed after topping concrete reaches the required compressive strength.

3. System Design

The four key concepts used to achieve the shallowness and structural capacity of the proposed system are: (1) increasing the beam width to accommodate a large number of prestressing strands while minimizing its depth; (2) making the beam continuous for topping weight, superimposed dead load, and live load; (3) providing continuous reinforced concrete element placed in the beam pocket through the column openings to support the beam and act as a hidden corbel, so that temporary corbels can be removed; and (4) making HC slabs continuous for negative moment. It should be noted that the two-direction continuity provided in the proposed system has been theoretically verified for both gravity and lateral load resistance of a six-story building without shear walls in low-seismicity regions (e.g. Midwest regions) through two-dimensional frame analysis. The elements and connections were designed based on this analysis, and the most critical conditions were then verified experimentally through monotonic testing. Although the developed system is considered widely applicable, the specific design presented herein was developed and verified for a specific hypothetical case-study building in a specific region. It is the designer's responsibility to perform the required due diligence to apply the system to other structures, even within the same region.

Fig. 2 shows the plan and elevation views of an example building. The building is 160 ft long, 128 ft wide, and 72 ft high. It is designed for a 100 psf live load, wind speed of 115 mph, seismic category B and occupancy category II, which are common values for buildings in Lincoln, NE. The average floor height is 12 ft. The interior bays are 32 ft by 34 ft in plan dimensions, while exterior bays are 32 ft by 30 ft. The shallow inverted tee (SIT) beams are oriented along the short direction of the building for economic reasons. Below are the specified properties of materials used in calculating the nominal capacities for this design example:

- 28-day Concrete strength of precast beams and columns = 8000 psi (6000 psi at release).
- 28-day Concrete strength of precast Hollow Core = 6000 psi.
- 28-day Concrete strength of shear key and beam pocket grout = 5000 psi
- 28-day Concrete strength of cast-in-place topping = 4000 psi.
- Prestressing strands are 0.5 in. diameter Grade 270 low-relaxation.

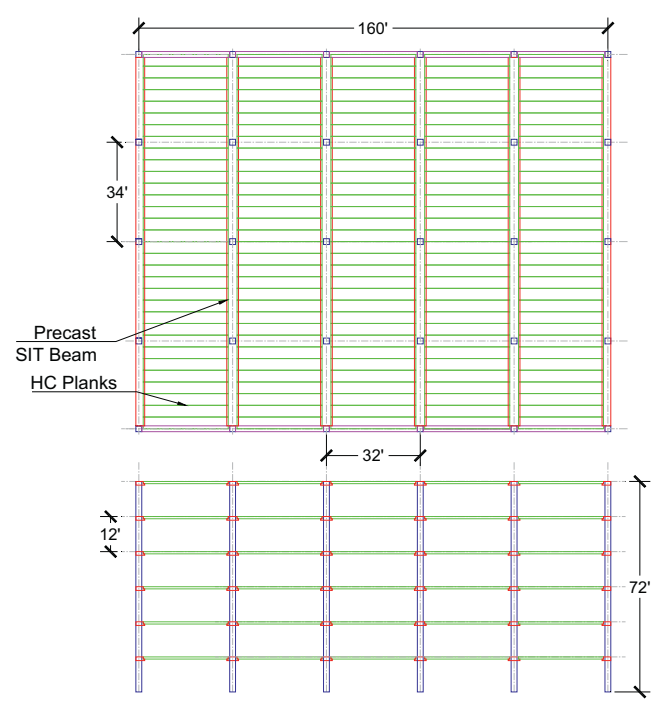

Fig. 2. Plan and elevation views of the gravity load resisting system for an example building.

- Reinforcing steel is Grade 60 deformed bars.
- Welded wire reinforcement (WWR) is Grade 70 deformed wires.

For gravity load analysis, the beams are designed according to ACI318-11 in flexure, shear, and deflection considering the following three loading stages:

1. SIT beams are non-composite simply supported beams under prestressing force, self-weight of SIT and HC, and construction live load.
2. SIT beams are continuous non-composite beams under the topping weight and construction live load.
3. SIT beam are continuous composite beams under superimposed dead load and live load.

For lateral load analysis, the loads were calculated according to ASCE 7-10 [2]. The analysis for stability and lateral load resistance was conducted for all construction stages. Torsional stability was investigated using the assumption that the beams are fully loaded with HC slabs on one side only. This loading case was found to be more critical than the case of patterned live loading.

Two-dimensional frame analysis was performed to determine the maximum positive and negative moments as well as the inter-floor drift due to lateral loads in both the HC and SIT beam directions. In this analysis, the positive moment capacity of the HC-beam connection is assumed to be null as there is no positive moment reinforcement at this connection. Fig. 3a and b shows the bending moment diagrams of SIT beams due to equivalent static loads for wind and seismic conditions respectively. Analysis in the direction of the beam-column frame indicated that the maximum positive moment in the SIT was 115 kip-ft, the maximum negative moment in SIT was 534 kip-ft, and maximum story drift was 0.68 in., corresponding to an inter-story drift of 0.5%. Fig. 4a and b shows the bending moment diagrams of a column strip consisting of four HC slabs (i.e. 16 ft wide) due to equivalent static loads for wind and seismic conditions respectively. Analysis results indicated that the maximum negative moment in four HC slabs was 126 kip-ft and the maximum story drift was 1.15 in., corresponding to an inter-story drift of 0.8%. As shown in Fig 4a and b, HC slabs are assumed to be hinged for positive moment resistance and continuous for negative moment resistance. This was done to eliminate the need for positive moment continuity between the slabs and the edges of the beams. Note that actual buildings would have elevator and stair towers, which could be utilized, if necessary, to contribute to lateral resistance.

Several design cycles were performed to determine the dimensions and reinforcement of SIT beams shown in Fig. 5a. Note that

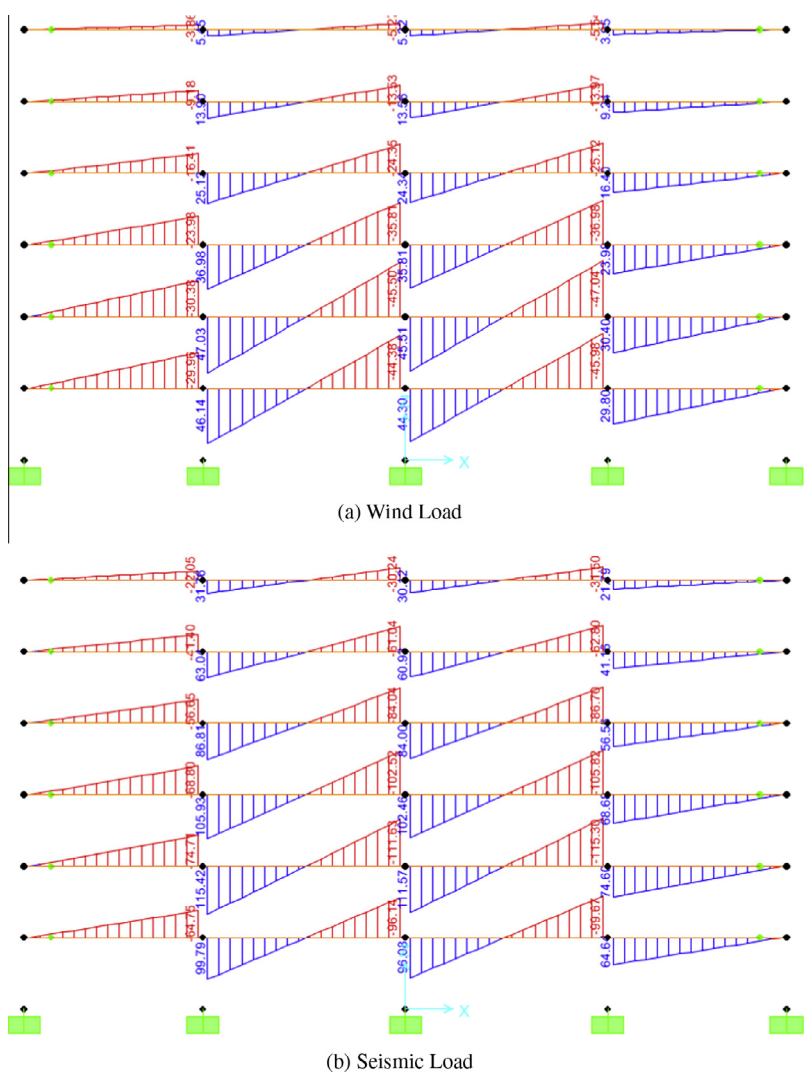

Fig. 3. Bending Moment Diagrams of SIT Beams due to: (a) Wind load, and (b) Seismic load.

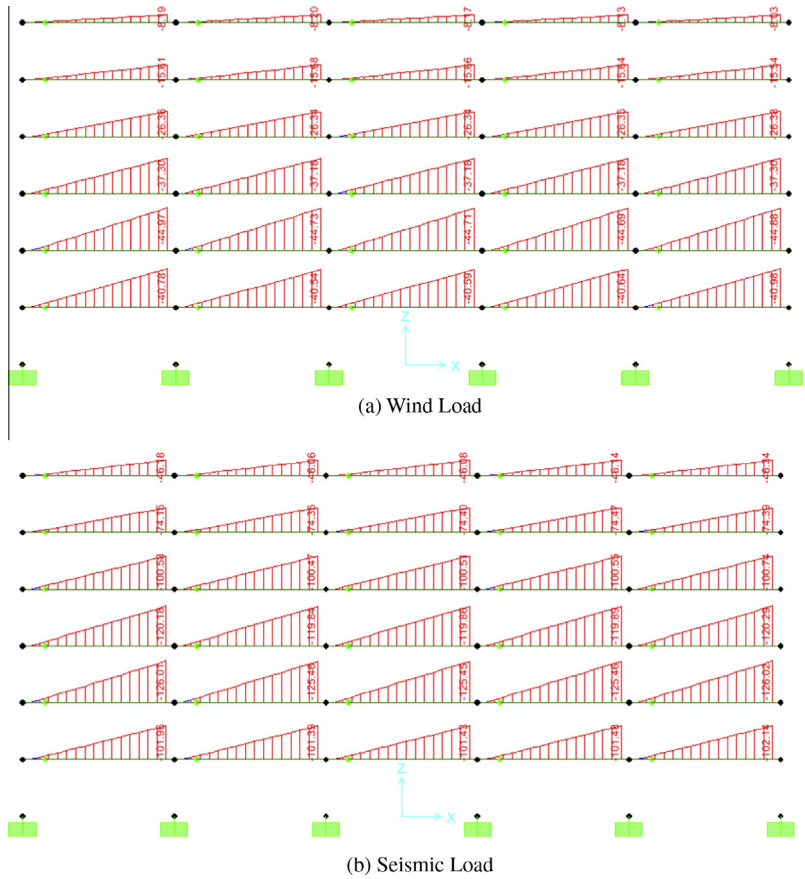

Fig. 4. Bending Moment Diagrams of HC due to: (a) Wind Load, and (b) Seismic Load.

the 90 in. long pockets at the ends of each SIT beam is used to form for the CIP concrete placed to achieve partial continuity prior to placement of the HC slabs. The dimensions and reinforcement of the composite beam and its connection to the column are shown in Fig. 5b. The figure shows the dimensions of the plates and angles used to stabilize the beam against torsional rotation and the negative moment reinforcement to achieve full continuity. Fig. 5c shows the dimensions and reinforcement of the precast column [13].

Design of the hidden corbels was performed using the shear-friction theory of ACI 318-11 Section 11.6.4 [1]. The columns are fabricated with recessed and roughened shear keys on all four sides within the floor depth to provide a shear friction mechanism between the beams and columns without permanent corbels. Also, the longitudinal reinforcement provided in the beam pocket for continuity contributes to shear transfer at the beam-column interface. The coefficients of friction of concrete placed monolithically and concrete placed against hardened concrete surfaces that are intentionally roughened are averaged based on the ratio of the pocket area to the total interface area. The contribution of the two steel angles connecting the beam top plates to the column side plates was ignored in calculating the shear capacity of the beam-column connection.

4. Experimental investigation

The experimental investigation was carried out to achieve several objectives. First, it was desired to determine constructability issues, especially with the HC slabs being called onto have negative moment continuity and the column required to support the beam without a permanent conventional corbel. Second, it was desired to validate the proposed design of the beam-column connections and beam-HC connections. A specimen representing approximately 20 ft × 20 ft area of the floor around an interior column was fabricated, erected, and tested. The specimen components were: two precast concrete SIT beam segments 11 ft long each, one precast concrete column 14 ft long, and eight precast concrete HC slabs 4 ft wide and 8 ft long each. These components were erected at the structural laboratory of UNL, Omaha, NE following the sequence presented earlier in Fig. 1. Fig. 6 shows a plan view of the assembly. The presented design of the specimen involves several improvements over a previously designed and tested specimen [4] based on experimental results.

Temporary corbels consisting of two angles 3 in. × 5 in. × ¾ in. each were bolted to the column using two 1 in. diameter bolts and nuts through the 1–1/16 in. diameter sleeves. The SIT beams were placed at a distance of 1 in. from the column face in addition to the 1 in. recess in column sides, which created a 2 in. wide gap between the column face and beam end to be grouted later and ensure adequate compression zone to resist negative moment at the support. Two 38 in. long angles (3 in. × 2.5 in. × ½ in.) were placed at the top of the SIT and welded to the SIT beam end plates and column side plates. These angles were required to stabilize the beams during HC erection. In addition, they contributed to resisting negative moment in the beam direction. The welding operation was performed by the precaster certified welders. Four HC slabs were erected on each side of the SIT beam. The erection sequence was set to test the torsional capacity of the SIT beam when loaded from only one side with HC. The ends of the HC slabs were spaced out about 1½″ away from the side face of the beam to allow easy grouting of these ends. The first set of continuity reinforcement (6#6 bars) required for resisting negative moment due to topping

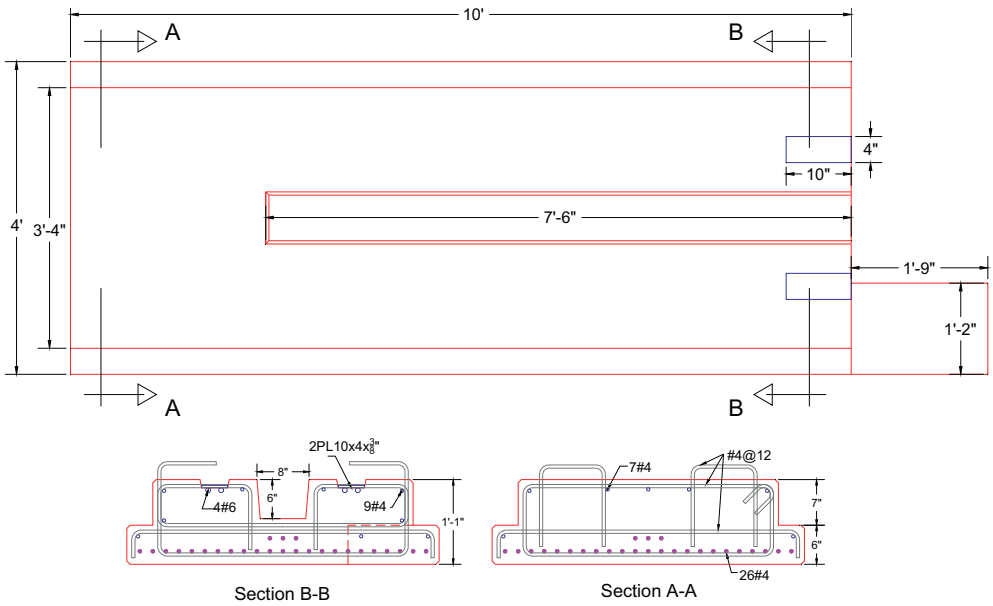

(a) Non-composite SIT beam

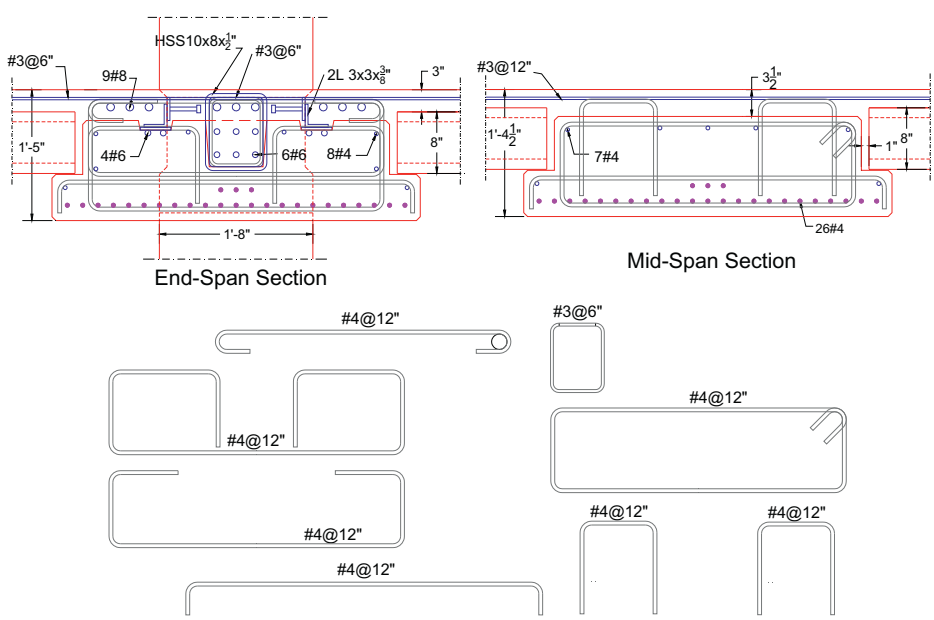

(b) Composite SIT beam and its connection through the column

Fig. 5. Dimensions and Detailing of: (a) Non-Composite SIT, (b) composite SIT, and (c) precast columns.

weight was placed in the SIT beam pocket inside #3@6 in. closed stirrups and through the column opening.

The HC keyways, SIT beam pockets, HC-SIT gaps and column opening were grouted by the precaster grouting crew using a 10 in. slump 5000 psi ready-mixed grout. Note that the column opening was filled only to the beam top. A void was still available to be filled with topping concrete. The second set of continuity reinforcement (9#8 bars) required for resisting negative moment due to superimposed dead load and live load was then placed. The topping reinforcement (welded wire reinforcement (WWR) D11@6 in.) required to provide HC continuity for lateral load were placed. Topping concrete was placed using a 6 in. slump 4000 psi ready-mixed concrete and finished to provide a smooth level surface. Finally, the temporary corbel angles were removed after the topping concrete reached its specified compressive strength. Fig. 7 shows the gain of compressive strength with time for the precast, grout, and topping concrete up to the time of testing. The actual compressive strengths on the testing day were 10,500 psi for precast beam and column specimen, 6500 psi for grout and hollow cores, and 5200 psi for topping. The actual compressive strength values for all specimen components were higher than the specified values as typically is the case. The specified compressive strength values were used in predicting the capacity of all the components, which is the case in actual design.

The test program includes the following four tests that will be discussed in detail in the following subsection [12]: (1) HC Nega-

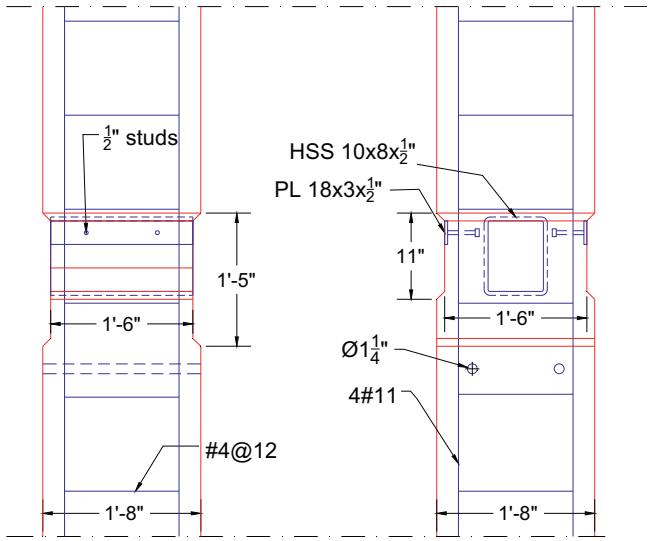

(c) Detailing of the precast column

Fig. 5 (*continued*)

tive Moment Capacity; (2) SIT Beam Negative Moment Capacity; (3) SIT Beam Positive Moment Capacity; and (4) Beam-Column Connection Shear Capacity.

4.1. HC negative moment capacity

The purpose of this test was to evaluate the negative moment capacity of the composite HC section for resisting lateral loads. Fig. 8 shows the test setup, where HC slabs were loaded at the unsupported end while clamping the other end to maintain specimen stability. Testing was performed by applying a uniform load on the cantilevered HC at 40 in. from the critical section, which is the HC-beam connection, while measuring the deflection at the cantilevered end. Fig. 9 plots the load–deflection relationship of this test. This plot indicates that the four composite HC slabs (i.e. 16 ft wide) were able to carry 61 kips, which corresponds to a total negative moment of 250 kip-ft (including the moment due to the weight of cantilevered HC plus topping). The demand for resisting lateral loads in the example building was 126 kip-ft per four HC

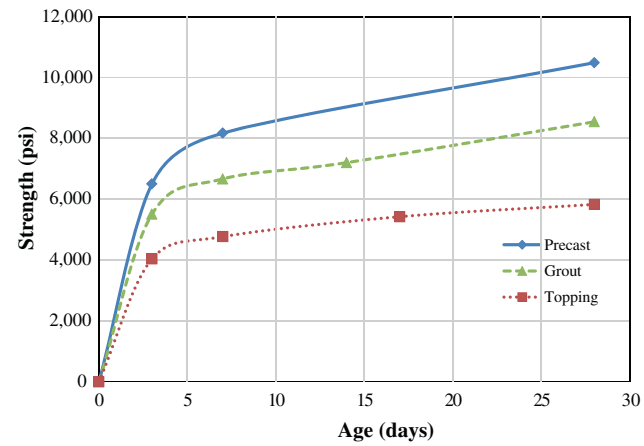

Fig. 7. Concrete strength gain with time.

slabs, which was 50% less than the applied moment. Also, the predicted capacity of the composite HC slabs using strain compatibility analysis and specified material properties (Grout $f'_c = 5$ ksi and WWR $f_y = 70$ ksi) was found to be 181 kip-ft, which is 28% less than the applied moment. This difference might be due to the significantly higher concrete strength and WWR yield strength (actual Grout $f'_c = 6.5$ ksi and WWR $f_y = 90$ ksi). The specimen was not loaded to failure to maintain its integrity for further testing.

4.2. SIT beam negative moment capacity

The purpose of this test was to evaluate the negative moment capacity of the composite SIT beam at the end sections (at the column face). Fig. 10 shows the test setup, where the load was applied at the unsupported end of the SIT beam while clamping the other end to prevent tipping over. One 400 kip jack was used to apply a concentrated load on the SIT beam at 9 ft from the center of the column, up to the predicted capacity, while measuring the deflection of the cantilevered end. Fig. 11 shows the load–deflection relationship for this test. This plot indicates that the SIT beam was able to carry a load up to 76 kip, which corresponds to an applied moment at the critical section of 672 kip-ft (including the moment due to the weight of the cantilevered beam). The design moment due to topping weight and live load of the example building was

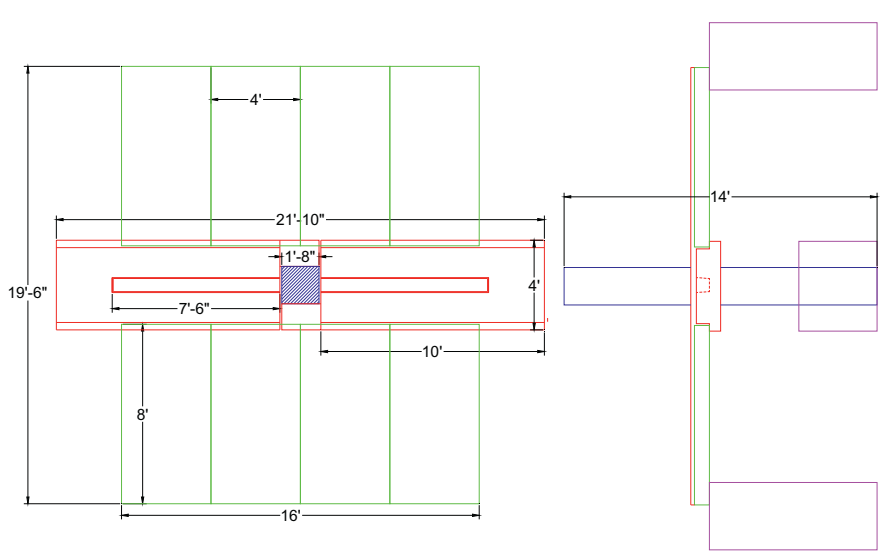

Fig. 6. Plan and side views of the assembled components of test specimen.

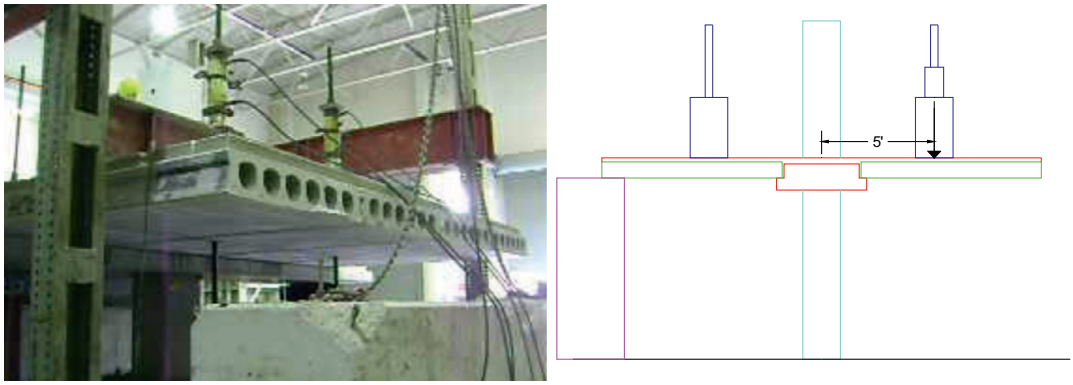

Fig. 8. Test setup for evaluating HC negative moment capacity.

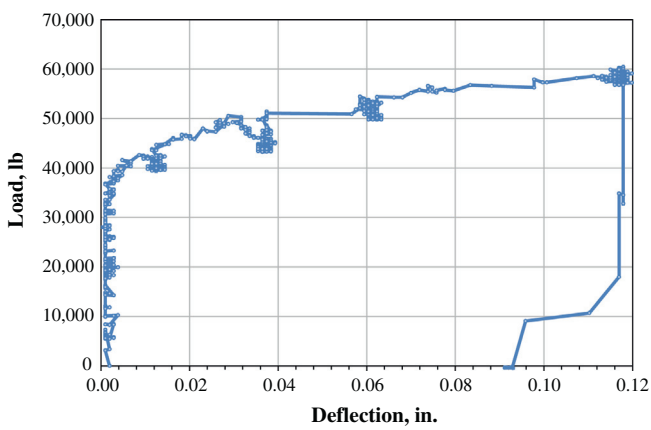

Fig. 9. Load–deflection relationship for HC negative moment testing.

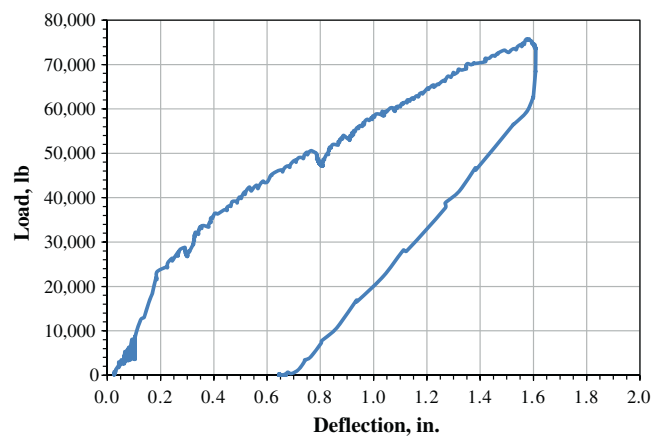

Fig. 11. Load–deflection relationship for SIT beam negative moment testing.

600 kip-ft, which was 11% below the applied moment. Also, the predicted capacity of the composite SIT beam using strain compatibility analysis was found to be 667 kip-ft.

4.3. SIT beam positive moment capacity

The purpose of this test was to evaluate the positive moment capacity of the SIT beam end section for lateral load resistance. Fig. 12 shows the test setup, where the load was applied upwards at the cantilevered end of the SIT beam. One 400 kip jack was used to apply a concentrated load at 9 ft from the center of the column up to the predicted positive moment capacity of the end section. Upward deflections of the cantilevered end were recorded while loading. Fig. 13 shows the load–deflection curve for the SIT beam positive moment capacity test. Cracking load was found to be 17 kips, while the maximum load was 26 kips, which corresponds to an applied moment of 162 kip-ft at the critical section. The applied load was stopped at this value because the column base started to rise up as it was not fully anchored to the floor. This value is 40% higher than the demand (115 kip-ft) and slightly higher than the predicted capacity calculated using strain compatibility analysis (153 kip-ft).

4.4. Beam-column connection capacity

The purpose of this test was to evaluate the shear capacity of the beam-column connection after removing the temporary corbel. Fig. 14 shows the test setup, where the SIT beams were loaded symmetrically at 3 ft from the center of the column on each side. The other end of the SIT beams and HC slabs were simply supported to stabilize the specimen. Two 400 kip loading jacks and

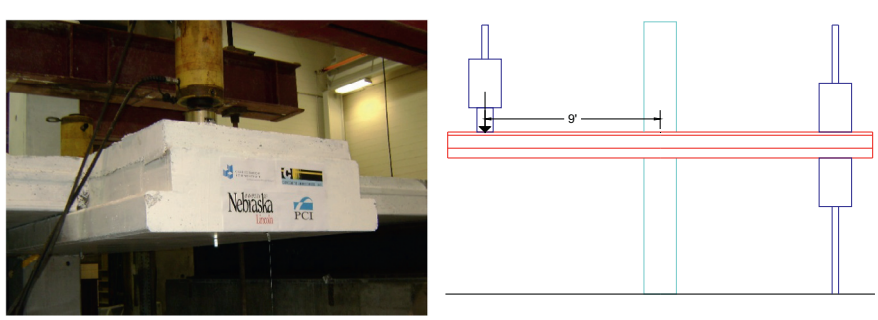

Fig. 10. Test setup for evaluating SIT beam negative moment capacity.

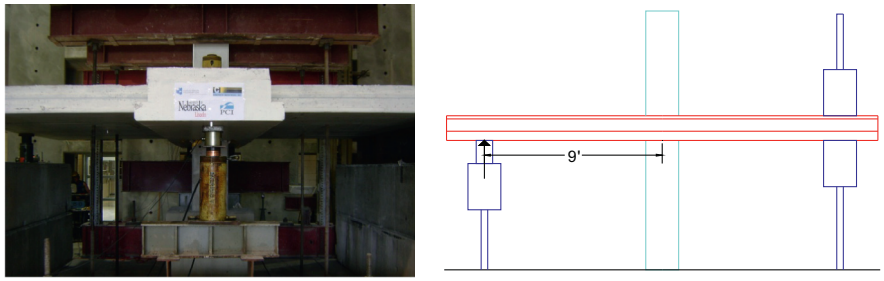

Fig. 12. Test setup for evaluating SIT beam positive moment capacity.

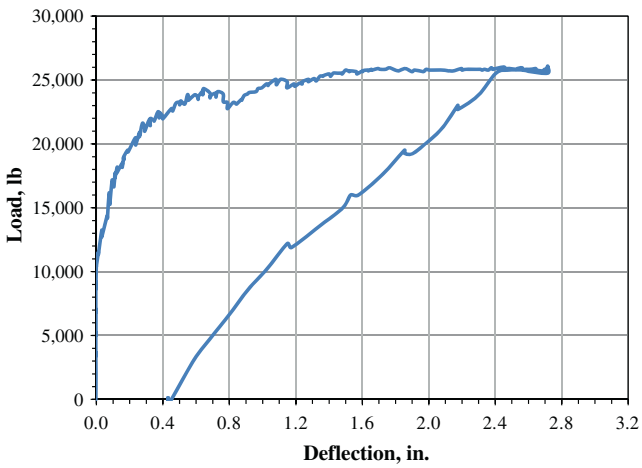

Fig. 13. Load–deflection relationship for SIT beam positive moment testing.

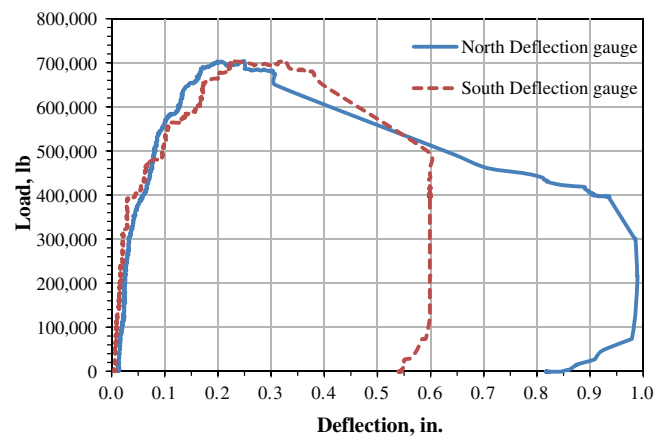

Fig. 15. Load–deflection relationship for beam-column connection shear testing.

two 12 in. square loading plates were used to apply the load on the top surface of the concrete topping up to failure. Fig. 15 shows load–deflection curve of that test. This curve indicates that the maximum load was 704 kip, which results in a shear force (627 kip) that was significantly higher than the demand of example building when loaded with 100 psf live load (308 kip). The nominal shear capacity calculated using shear friction theory was found to be 614 kip. The measured capacity was very close to the theoretical nominal capacity. It should be noted that this high shear capacity was achieved despite of the fact that the specimen was already cracked in earlier testing.

Table 1 summarizes the demand, theoretical (nominal) capacity and experimental (measured) capacity of the four tests performed on the specimen. The results in this table indicate the adequacy of the specimen design.

5. Design aids

To assist designers in selecting an appropriate SIT beam section for a given load and bay size, preliminary design aids were developed assuming the same lateral loads presented in the example building. Three SIT beam section are proposed for the three typical HC thicknesses (8 in., 10 in., and 12 in.) to cover a wide range of spans and loading conditions. Table 2 lists the dimensions and properties of the three proposed SIT beam sections. Figs. 16–18 present the design charts for SIT13, SIT15, and SIT17 respectively. The vertical axis in each chart presents the value of the live load (lb/ft^2) and the horizontal axis presents the span of the SIT beam. Every chart has 5 curves that correspond to various HC spans. Also, each chart shows a cross section of the SIT beam along with its dimensions and required reinforcement. It should be noted that

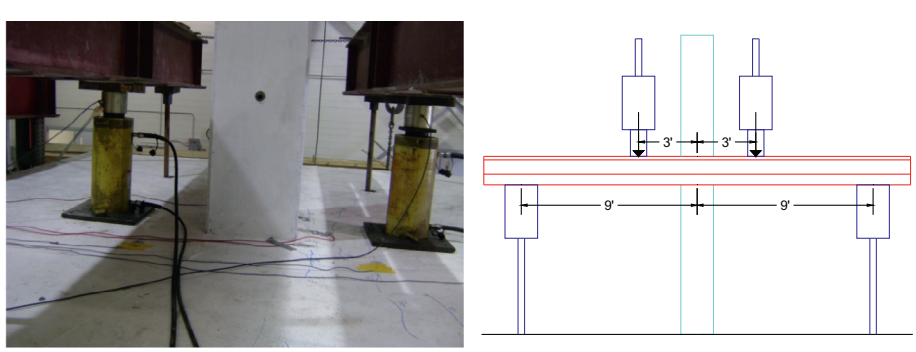

Fig. 14. Test setup for evaluating shear capacity of beam-column connection.

Table 1
Comparing demand, predicted capacity and applied load/moment for the four tests.

Test	Test load (kip)	Demand	Predicted capacity	Applied load/moment	Comments
Hollow-core negative moment capacity (kip.ft)	61	126	181	250	Test stopped before failure
SIT Beam negative moment capacity (kip.ft)	76	600	667	672	Test stopped at nominal capacity
SIT beam end positive moment capacity (kip.ft)	26	115	153	162	Test stopped at nominal capacity
Beam-column connection capacity (kip)	704	308	614	627	Shear failure

Table 2
Properties of standard SIT beam sections.

Standard beams	Depth (in.)	Web Depth (in.)	Area (in.^{2})	Weight (lb/ft)	Y_b (in.)	Y_t (in.)	I_x (in.^{4})	HC Thick. (in.)	HC Wt. (psf)	$A_{comp.}$ (in.^{2})	$h_{comp.}$ (in.)	Y_{bcomp} (in.)	$Y_{tcomp.}$ (in.)	$I_{xcomp.}$ (in.^{4})
SIT 13	13	7	567.25	591	6.204	6.796	7986	8	64	737.7	16.5	8.22	8.28	18,167
SIT 15	15	9	647.25	674	7.167	7.833	12,267	10	72	817.7	18.5	9.20	9.30	26,123
SIT 17	17	11	727.25	758	8.138	8.862	17,841	12	80	897.7	20.5	10.18	10.32	37,606

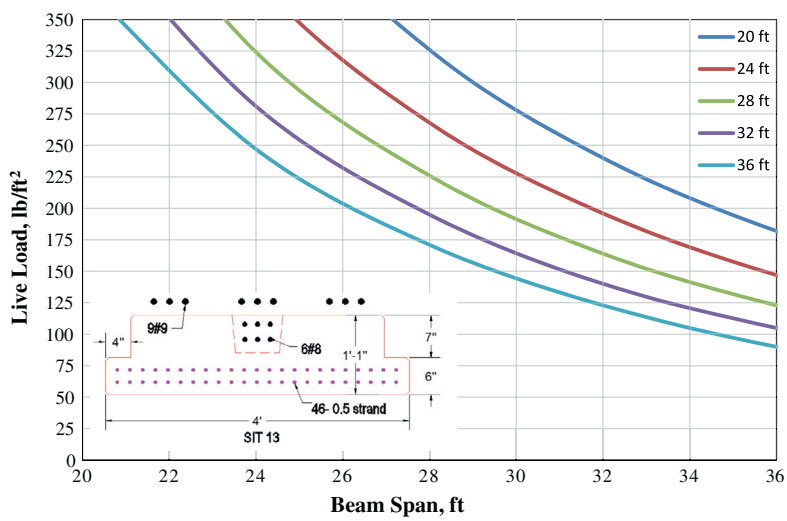

Fig. 16. Design chart for SIT13.

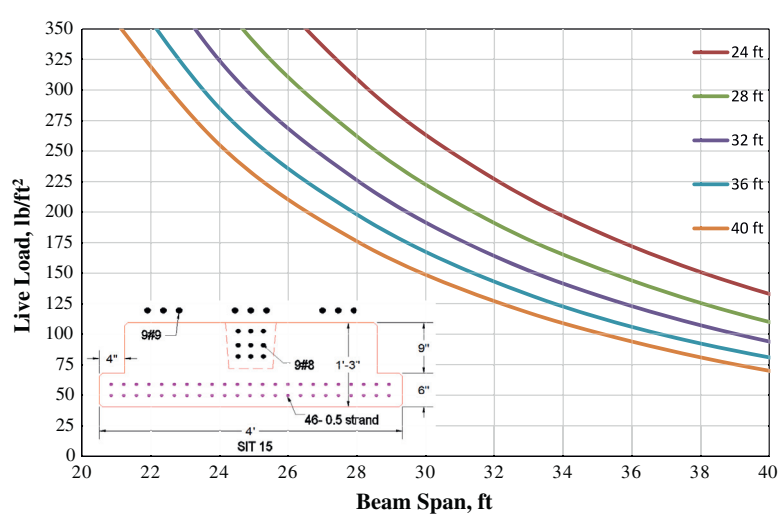

Fig. 17. Design chart for SIT15.

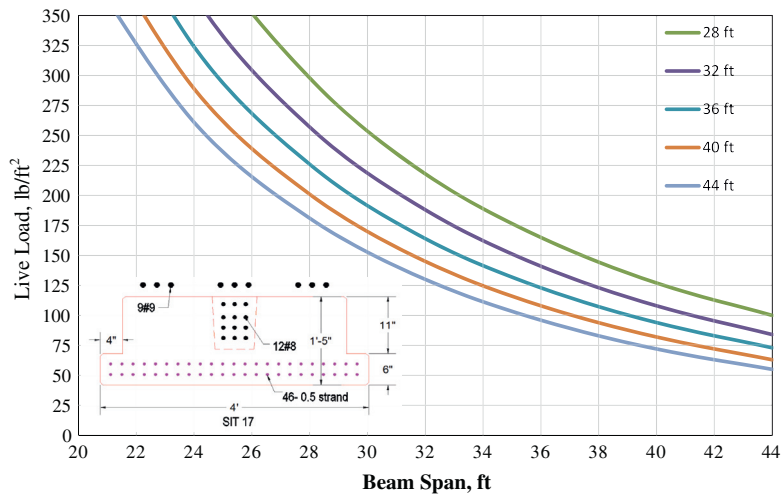

Fig. 18. Design chart for SIT17.

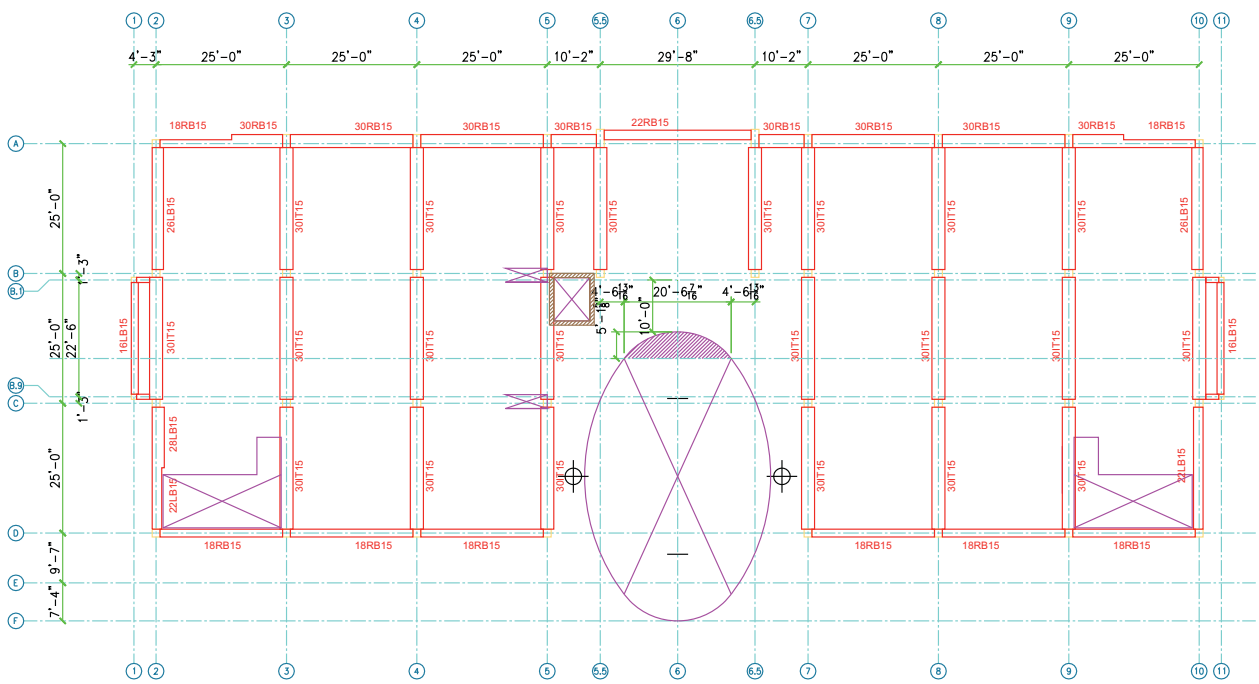

Fig. 19. Plan view of the second floor of the Farmer's Mutual building.

these design charts are based only on the gravity load resistance of the system. Lateral load resistance has to be checked according to project specifications.

6. Application example

The proposed shallow floor system was used in the construction of the Farmer's mutual building located at 1220 Lincoln Mall, Lincoln, NE. This five-story office building was jointly designed by e-Construct USA, LLC. and by Concrete Industries (CI), Inc. Lincoln, NE. Fig. 19 shows plan view of the second floor along with the type and size of its beams. This figure indicates that all interior beams were shallow inverted tee beams (30IT15) that were supported on temporary steel corbels and made continuous through column openings similar to the proposed floor system. Fig. 20 shows the cross section of an interior beam that was 30 in. wide, 15 in. deep, and spanned 25 ft. The floors were generally designed for 100 psf

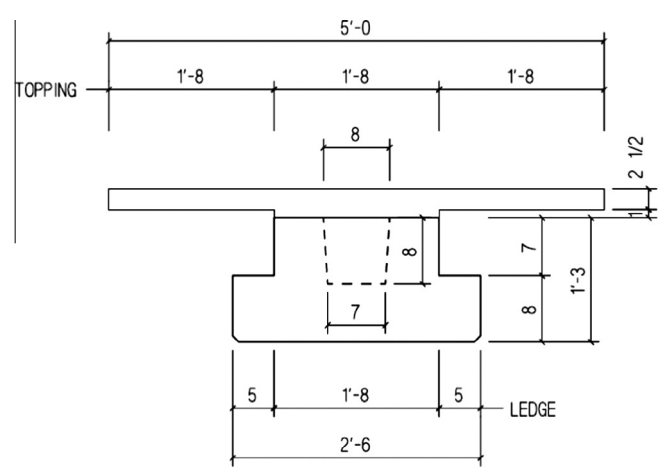

Fig. 20. Cross section of the shallow inverted-tee beam used in the Farmer's Mutual building.

Fig. 21. Construction pictures of the Farmer's Mutual building.

live load. The beams were made of 8000 psi precast concrete, pretensioned with 14–0.5 in. diameter Grade 270 low-relaxation strands, and made composite with a 2 in. thick 4000 psi cast-in-place topping. The beam pocket was reinforced using 9#8 Grade 60 bars in three rows and filled with 5000 psi flowable concrete. The temporary corbel sleeves were filled with 8000 psi grout to match the strength of the precast concrete column after the steel angles were removed. The exterior beams were conventional rectangular and L-shape beams that were simply supported on column corbels and are hidden in the exterior walls. Fig. 21 shows two photos of Farmer's Mutual building during construction. The precaster and contractor expressed satisfaction with the simplicity, efficiency, and economy of the proposed framing system.

7. Flat soffit floor system

After the conclusion of this system's development, the research team performed further optimization that could result in a shallower depth (span-to-depth ratio of 30) and removal of the concrete beam ledge. This "flat soffit" system would be attractive in buildings that do not require a suspended ceiling, such as hotels and apartment buildings. Fig. 22 shows the cross section of the flat soffit precast concrete floor system. It consists of 4 ft wide and 10 in. thick precast prestressed concrete beam, 10 in. thick hollow core slabs, 20 in. × 20 in. precast concrete column, and at least 2 in. thick cast-in-place concrete composite topping. This floor system was designed and detailed for the same example building presented in Fig. 2. Fig. 23 shows the different options of the temporary ledges proposed to support the HC slabs during construction. For more information on this system and its testing results, please refer to Henin et al. [6].

8. Conclusions and recommendation for future research

Based on the research presented in this paper, the following conclusions can be made:

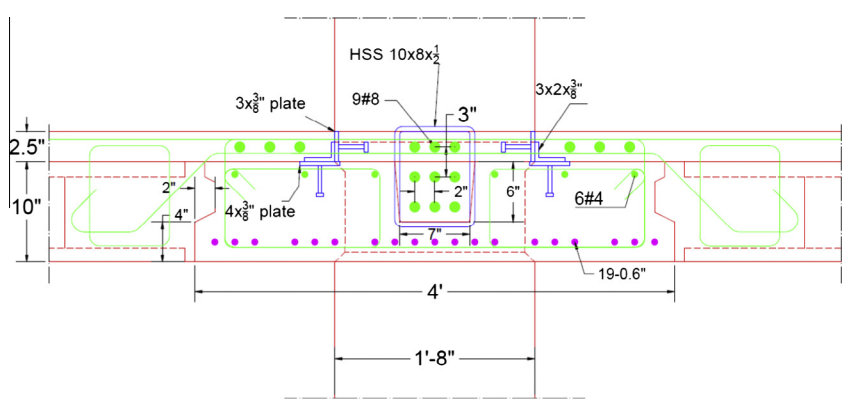

Fig. 22. Concrete dimensions and reinforcing details of the flat soffit floor system.

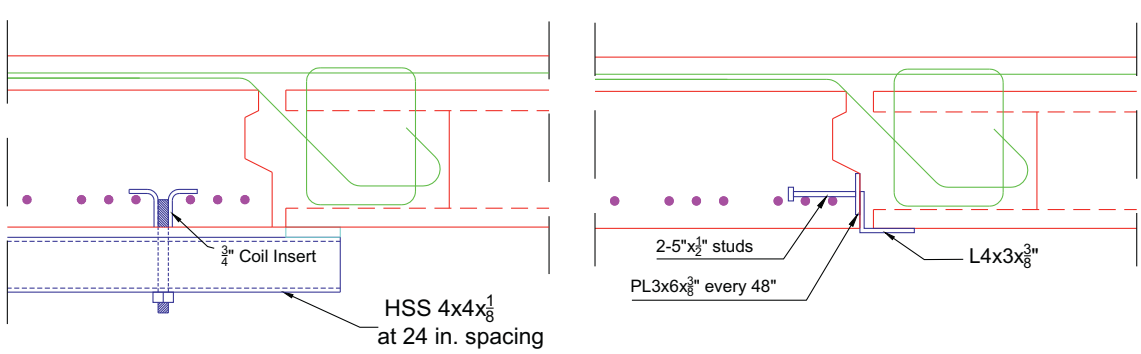

Fig. 23. Temporary ledge alternatives for supporting HC during erection in the proposed flat soffit floor system.

- The proposed shallow precast concrete framing system is easy to produce and erect using conventional methods currently available to precast producers in the United States.
- The proposed framing system was shown to satisfy the gravity and lateral load demands for a specific six-story office building located in Lincoln, NE, a location of low seismic demand. The proposed system can be extended to cover the practical range of floor spans and loads, and lateral loads for regions of moderate seismicity.
- Further analysis and testing is required to validate the ability of the system for lateral load resistance in high seismicity zones. However, the proposed HC-SIT-Column system can be readily used for gravity load resistance regardless of the location of the project.

Acknowledgments

The authors wish to acknowledge the financial and technical support of the Charles Pankow Foundation (for gravity load analysis and related testing), Concrete Industries Inc. (for specimen donation and lateral load analysis and testing), PCI R&D committee, and University of Nebraska-Lincoln. Special thanks to Mr. Roger J. Becker, for his comments that significantly improved the quality of the manuscript.

References

[1] American Concrete Institute (ACI). Building code requirements for structural concrete and commentary. Farmington Hills, MI; 2011.
[2] American Society of Civil Engineers (ASCE). Minimum design loads for buildings and other structures. Standards ASCE/SEI 7-10, Reston, VA; 2010.
[3] Fawzy F. Shallow precast hollow-core floor system. M.S. Thesis, University of Nebraska-Lincoln, NE; 2009.
[4] Fawzy F, Morcous G, Lafferty M, Tadros M. Continuous precast/prestressed concrete shallow floor system. In: 2009 PCI annual convention and national bridge conference, San Antonio, TX; 2009.
[5] Hanlon JW, Dolan CW, Figurski D, Deng J, Dolan JG. Precast concrete building system components for the Westin Resort Hotel: Part 1. PCI J 2009;54(2):88–96. Spring.
[6] Henin E, Morcous G, Tadros MK. Shallow Flat Soffit Precast Concrete Floor System. ASCE Practice Periodical on Structural Design and Construction 2013;18(2):101–10.
[7] Low S, Tadros MK, Nijhawan JC. A new framing system for multistory buildings. Concr Int 1991;13(9):54–7.
[8] Low S, Tadros MK, Einea A, Magana R. Seismic behaviour of a six story precast concrete office building. PCI J 1996;41(6):56–75.
[10] Post-Tensioning Institute (PTI). Post-tensioning. Manual 6th ed. Phoenix, AZ; 2006.
[11] Precast/Prestressed Concrete Institute (PCI). Design Handbook 7th ed. Chicago, IL; 2010.
[12] Tadros M, Morcous G. Shallow hollow-core floor system: final report. Technical Report 07-08, Charles Pankow Foundation, Claremont, CA; 2011.
[13] Tadros M, Morcous G. Shallow hollow-core floor system: design procedure document. Technical Report 07-08, Charles Pankow Foundation, Claremont, CA; 2011.
[14] Thompson, J.M, and Pessiki, S. Behavior and Design of Precast/Prestressed Inverted Tee Girders with Multiple Web Openings for Service Systems. ATLSS Report 04-07, Lehigh University, PA. 2004.

Further reading

[9] Pessiki S, Prior R, Sause R, Slaughter S. Review of Existing precast concrete gravity load floor framing systems. PCI J 1995;40:70–83.